HAL open science

A Disruption Recovery Problem with Time Windows Change in the Last Mile Delivery of Online Shopping

Li Jiang, Changyong Liang, Junfeng Dong, Wenxing Lu, Marko Mladenovic

To cite this version:

Li Jiang, Changyong Liang, Junfeng Dong, Wenxing Lu, Marko Mladenovic. A Disruption Recovery Problem with Time Windows Change in the Last Mile Delivery of Online Shopping. Mathematical Problems in Engineering, 2018, 2018, pp.2096416. 10.1155/2018/2096416 . hal-03675640

HAL Id: hal-03675640

https://uphf.hal.science/hal-03675640

Submitted on 23 May 2022

HAL is a multi-disciplinary open access archive for the deposit and dissemination of scientific research documents, whether they are published or not. The documents may come from teaching and research institutions in France or abroad, or from public or private research centers.

L'archive ouverte pluridisciplinaire **HAL**, est destinée au dépôt et à la diffusion de documents scientifiques de niveau recherche, publiés ou non, émanant des établissements d'enseignement et de recherche français ou étrangers, des laboratoires publics ou privés.

Distributed under a Creative Commons Attribution 4.0 International License

Hindawi
Mathematical Problems in Engineering
Volume 2018, Article ID 2096416, 10 pages
https://doi.org/10.1155/2018/2096416

Research Article

A Disruption Recovery Problem with Time Windows Change in the Last Mile Delivery of Online Shopping

Li Jiang,[1,2] Changyong Liang,[1,2] Junfeng Dong,[1,2] Wenxing Lu,[1,2] and Marko Mladenovic[3]

[1] *School of Management, Hefei University of Technology, Hefei 230009, Anhui, China*
[2] *Key Laboratory of Process Optimization and Intelligent Decision-Making, Ministry of Education, Hefei 230009, Anhui, China*
[3] *LAMIH, University of Valenciennes, 59313 Valenciennes, France*

Correspondence should be addressed to Li Jiang; jiangli@hfut.edu.cn

Received 29 August 2018; Revised 15 November 2018; Accepted 2 December 2018; Published 10 December 2018

Academic Editor: Adrian Chmielewski

Copyright © 2018 Li Jiang et al. This is an open access article distributed under the Creative Commons Attribution License, which permits unrestricted use, distribution, and reproduction in any medium, provided the original work is properly cited.

Frequent time window changing disruptions result in high secondary delivery rates in the last mile delivery. With the rapid growth of parcel volumes in online shopping, the time window changing disruptions could translate to substantial delivery cost-wastes. In recent years, customer pickup (CP), a new delivery mode that allows customers to pick up their parcels from shared delivery facilities, has provided a new way to deal with such disruptions. This study proposed a disruption recovery problem with time windows change in the last mile delivery in which customers can be served through home delivery (HD) or CP. A variant variable neighborhood descent (VVND) algorithm was presented to solve the problem. Computational experiments based on a set of instances were tested, and results were compared with other heuristics in the literature, which have affirmed the competitiveness of the model and algorithm.

1. Introduction

The rapid e-commerce growth results in a fast increase of parcel delivery. According to the State Post Bureau of China, the parcel volume of online shopping of 3.67 billion in 2011 increased to 40.06 billion in 2017, with an average growth rate of more than 48% within six years. This increase of parcel volume also caused the increase of the one-time delivery failure rate. Many parcels failed to be delivered at the first attempt [1], and these parcels had to be delivered the second time or even the third time. The main reason for this high delivery failure rate was the "not-at-home" problem (customers are going out); thus, the agreed delivery time between a courier and a customer commonly changes. Reducing the high delivery failure rate to deal with the frequent time window changing disruptions had become a key issue in the last mile delivery of online shopping.

Previously, in terms of the last mile delivery, home delivery (HD) (that is, delivering parcels directly to customers' homes or workplaces) was common. Recently, customer pickup (CP) has become widely popular, because it allows customers to pick up their parcels from shared delivery facilities (SDFs) near their homes or workplaces at their convenience. The SDFs widely used in more than 80 cities in China include the "CaiNiao" station established by Alibaba Company, "FengChao" established by SF-Express, and "Sposter" established by the China Post Group.

The rescheduling of delivery routes [2, 3] plays a good role in solving the disruption recovery problem (DRP) in the HD mode, which is an NP-hard problem [3]. Meanwhile, for the DPR in the CP mode, deciding on the allocation of SDFs while rescheduling the delivery routes is important. The DRP in the CP mode is more complicated than that in the HP mode. Although many articles were published on the DRP in the HD mode [2–4], only a few studies explored the DRP in the CP mode. This study proposed a DRP with time windows change in the last mile delivery to solve the practical problems and bridge the gap in the literature. The customers could be served either by couriers (HD) or by SDFs (CP). The purpose was to decide on the allocation of SDFs and rescheduling

of the delivery route to minimize the total delivery cost when a disruption (time windows changed) would occur. A variant variable neighborhood descent (VVND) algorithm was proposed to solve this problem.

The rest of this paper is structured as follows. Section 2 provides a comprehensive review of the related studies. Section 3 details the description and formulation of the proposed DRP. Section 4 discusses the proposed VVND algorithm. Section 5 displays the results of the computational experiments and the discussion. Section 6 concludes this paper.

2. Literature Review

One key issue related to our research was the shared delivery facilities (parcel lockers or shared reception boxes) in the last mile delivery. The SDF studies were categorized into two streams: case study and routing optimization.

The case studies analyzed the benefits of the SDFs in the last mile delivery by using survey data. Punakivi et al. [5] emphasized that approximately 55%-66% of cost could be reduced from home delivery by allowing customers to pick up parcels from shared reception boxes. A similar study by Kämäräinen [6] contended that the cost reduction was 42%. Edwards et al. [7] confirmed that collecting parcels from parcel lockers could reduce carbon emission by 83%. Morganti et al. [8] focused on the self-collection networks in Europe and affirmed that the parcel lockers could reduce the operational cost of last mile logistics delivery. Meanwhile, Lemke et al. [9] analyzed the usability of the parcel lockers from customers' perspectives by using data from Polish cities, and the results validated that most consumers prefer using lockers near their homes. Yuen et al. [10] explored customers' intention to use self-collection in the last mile delivery by using data from 164 consumers located in Singapore.

The routing optimization focused on solving the SDF location and the delivery routing problem. Mainly, Deutsch et al. [11] studied the location allocation problem of parcel lockers in the last mile delivery and aimed to maximize the profit of a consignment company by deciding on the location of parcel lockers. Zhou et al. [12] proposed a location-routing problem with home delivery and customer pickup for the city distribution of online shopping to minimize the vehicle, routing, opening of SDF, and second delivery costs in the last mile delivery. Zhou et al. [13] also introduced a two-echelon vehicle routing problem with delivery options in the last mile distribution, wherein customers could be served by home delivery or customer pickup to minimize the total distribution cost.

Another key issue related to our research is the disruption recovery problem (DRP), which is involved in multiple research areas, such as the passenger transport disruption recovery problem [14–16], vessel schedule recovery problem [17, 18], and logistics distribution recovery problem. In logistics, Zeimpekis et al. [19] introduced a management system framework for dealing with disruption accidents in urban logistics distribution. Protvin et al. [20] studied the disruption accidents of new customers and uncertain travel time that were frequently encountered during the collection of tasks. Mu et al. [4] proposed a disrupted vehicle routing problem (VRP) to deal with the disruptions that occur at the execution stage of a VRP plan, while Zhang el al. [21] analyzed the effect of disruptions on road networks and the recovery process by using domain wall theory.

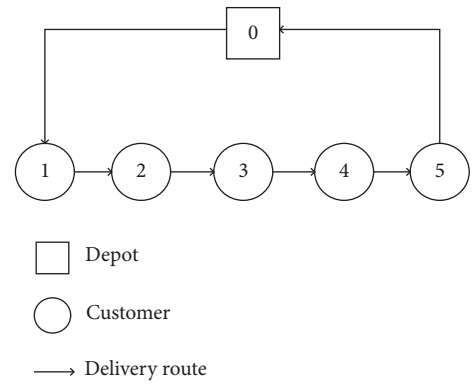

Figure 1: Network and route without SDFs.

Existing literature on the DRP had produced effective solutions for various disruptions, especially the disruption that occurred in logistics. However, such literature mainly focused on the DRP in the HD mode, and no study on the disruption problem in the CP mode was available. This study explored the disruption recovery problem (DRP) with time windows change in the last mile delivery in the CP mode to solve the practical problem and bridge the gap in the literature.

3. Problem Formulations

3.1. Problem Description. A network without SDFs in the last mile delivery is described as follows. $G = (V, E)$, $V = V_D \cup V_C$, V_D stands for depot, and V_C stands for customer set. $E = E_C$, $E_C = \{(i, j) \mid i, j \in V_C\}$ is a set of edges connecting each pair of nodes in V_C. The travel cost and travel time of the edge in E_C from $i \in V_C$ to $j \in V_C$ are c'_{ij} and t'_{ij}, respectively. The time window of $i \in V_C$ is expressed as $[et'_i, lt'_i]$. Figure 1 exhibits the network and initial route.

A network with SDFs in the last mile delivery is described as follows.$G = (V, E)$, $V = V_D \cup V_C \cup V_P$, V_D is the depot set; V_C is the customer set, and V_P is the SDF set. $[et_i, lt_i]$ stands for the changed time window of customer $i \in V_C$. $E = E_1 \cup E_2$, $E_1 = \{(i, j) \mid i, j \in V\}$ is a set of directed edge connecting each pair of nodes in V; the delivery distance and time of the directed edge (i, j) in E_1 are c_{ij} and t_{ij}, respectively. $E_2 = \{(i, p) \mid i \in V_C, p \in V_P\}$ contains the edges between SDF $p \in V_P$ and customer $i \in V_C$, and the pickup distance and the time of the edge (i, p) in E_2 are d_{ip} and s_{ip}, respectively. The unit opening cost of SDF $p \in V_P$ is μ_p. Figure 2 presents the network with SDFs.

Couriers depart from depots and deliver parcels according to the initial optimal solution. During delivery, couriers must adjust the delivery route to obtain a good solution when a disruption occurs (customers' time windows changed). In

Table 1: Notions used in formulation.

Sets	
G	Network, $G = (V, A)$
V	Node set, $V = V_D \cup V_C \cup V_P$
V_D	Depot set, $V_D = \{0\}$
V_C	Customer set, $V_C = \{1, 2, 3, ..., N\}$
V_P	SDF set, $V_P = \{N + 1, N + 2, ..., N + M\}$
E	Arc set, $E = E_1 \cup E_2$
E_1	Delivery arc set, $E_1 = \{(i, j) \mid i, j \in V\}$
E_2	Pickup arc set, $E_2 = \{(i, p) \mid i \in V_C, p \in V_P\}$
Parameters	
M	Number of SDFs
N	Number of customers
c_{ij}	Distance of $arc(i, j) \in E_1$
t_{ij}	Travel time of $arc(i, j) \in E_1$
d_{ip}	Pickup cost of $arc(i, p) \in E_2$
s_{ip}	Pickup time of $arc(i, p) \in E_2$
$[et_i, lt_i]$	Time window of customer $i \in V_C$
μ_p	Unit opening cost of SDF p
L	Large positive number
α	Sub-weight of delivery delay time
β	Sub-weight of pickup distance
$w1$	Weight of pickup cost
$w2$	Weight of routing cost
$w3$	Weight of SDFs opening cost
R	Server radius of the SDFs
Decision variables	
x_{ij}	Binary variable, $x_{ij} = 1$, if arc$(i,j) \in E_1$ is used by courier; otherwise, $x_{ij} = 0$
y_{ip}	Binary variable, $y_{ip} = 1$, if customer $i \in V_c$ is assigned to SDF $p \in V_P$; otherwise, $y_{ip} = 0$
at_i	Integer variable, arrival time to node $i \in V$

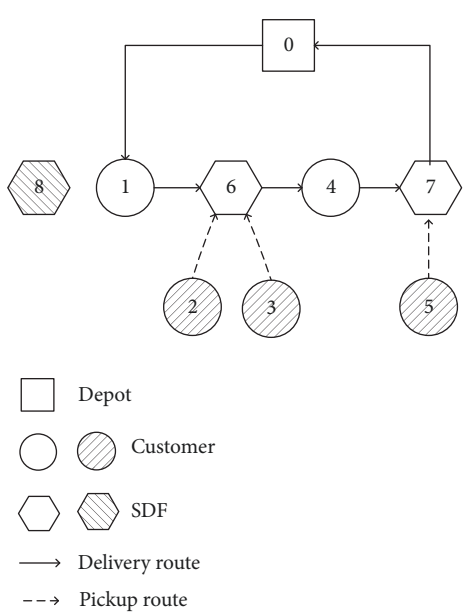

Figure 2: Network and route with SDFs.

this paper, the objective function is to minimize the cost related to customer satisfaction, route cost, and SDF opening cost.

Without losing generality, the following assumptions are made.

(1)The capacity limit of SDFs is not considered in this paper.

(2) Customer satisfaction is only inversely proportional to the delivery delay time and customer pickup distance.

(3) Couriers must wait until et_i to start the service of customer $i \in V_C$; they can deliver parcels to SDFs at any time.

(4) Each customer can be served by either couriers or SDFs.

3.2. Notions and the Proposed Model. Table 1 summarizes the notions used in the formulation.

When a disruption occurs, the influence of customers and couriers is different.

(1) The influence of disruption on customer is service satisfaction. According to assumption (2), service satisfaction is related to delivery delay time and customer pickup distance.

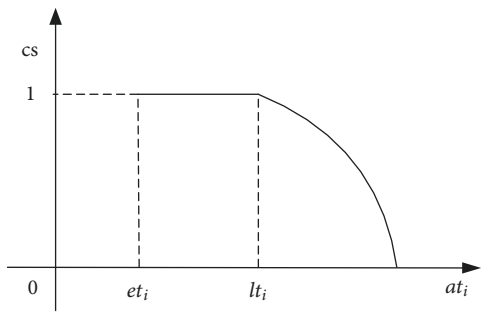

Figure 3: Relationship between customer satisfaction and delivery delay time.

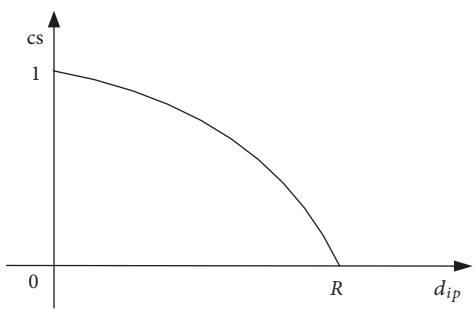

Figure 4: Relationship between customer satisfaction and pickup distance.

Service satisfaction decreases with the increase of delivery delay time and customer pickup distance, which are shown in Figures 3 and 4, respectively.

The cost related to service satisfaction can be formulated as Formula (1).

$$f\left(at_i, y_{ip}\right) = \alpha \sum_{i \in V_C} \max\left(at_i - lt_i, 0\right) + \beta \sum_{i \in V_C, p \in V_P} y_{ip} d_{ip} \quad (1)$$

(2) The influence of disruption on couriers is delivery route and SDF opening costs, the function related to delivery distance is shown as Formula (2), and the function related to SDF opening cost is shown as Formula (3).

$$g\left(x_{ij}\right) = \sum_{i,j \in V_C \cup V_P} c_{ij} x_{ij} \quad (2)$$

$$h\left(y_{ip}\right) = \sum_{i \in V_C} \mu_p y_{ip} \quad \forall p \in V_P \quad (3)$$

On the basis of the above statements, the model for the proposed problem can be stated as follows:

$$obj = \min\left(w_1 f\left(at_i, y_{ip}\right) + w_2 g\left(x_{ij}\right) + w_3 h\left(y_{ip}\right)\right) \quad (4)$$

which is subject to

$$\sum_{j \in V_C \cup V_P} x_{ij} + \sum_{p \in V_P} y_{ip} = 1 \quad \forall i \in V_C \quad (5)$$

$$\sum_{j \in V_C \cup V_P} x_{ij} + \sum_{p \in V_P} y_{ip} = 1 \quad \forall i \in V_C \quad (6)$$

S_1:	1	2	3	4	5
	0	6	6	0	7

S_2:	0	1	6	4	7	0

Figure 5: Encoding scheme for the solution of Figure 1.

$$\sum_{j \in V_C \cup V_P} x_{ip} \le \sum_{i \in V_C} y_{ip} \quad \forall p \in V_P \quad (7)$$

$$at_i + t_{ij} - L\left(1 - x_{ij}\right) \le at_j \quad \forall i, j \in V_C \cup V_P \quad (8)$$

$$at_p + s_{ip} - L\left(1 - y_{ip}\right) \le at_i \quad \forall i \in V_C, \ \forall p \in V_P \quad (9)$$

$$at_i \ge et_i \quad \forall i \in V_C \quad (10)$$

$$d_{ip} y_{ip} \le R \quad \forall i \in V_C, \ p \in V_P \quad (11)$$

$$x_{ij} = \{0, 1\} \quad \forall i, j \in V_C \cup V_P \quad (12)$$

$$y_{ip} = \{0, 1\} \quad \forall i \in V_C, \ \forall p \in V_P \quad (13)$$

Objective function (4) minimizes the sum of the cost related to service satisfaction, route cost, and SDF opening cost. Constraints (5) and (6) ensure that each customer is served exactly once by either SDF or a courier, and once a courier enters a node, it must also leave for it. Constraint (7) ensures that the SDF that is allocated for customers must be allocated to the route. Constraints (8) and (9) guarantee that the working time of customer should be satisfied. Constraint (10) makes sure that the courier must be served only after the time window has started. Constraint (11) makes sure that the service radius of the SDF is within the allowable distance. Constraints (12) to (13) define all variables.

4. Hybrid Approach

For the disruption recovery problem, the algorithm should focus not only on solution accuracy, but also on solution speed. If the solution time is too long, then the solution may have been infeasible. The variable neighborhood descent (VND) has been successfully applied for solving hard combinatorial optimization problems, and it particularly performs well for solving LRPs [22, 23]. This study proposes a variant variable neighborhood descent (VVND) algorithm for solving the disruption recovery problem. The innovation of the VVND includes two aspects. (1) Two new operators (*addBox()* and *dropBox()*) are added in the proposed algorithm. (2) The 2-opt operator is improved by using the location range (LR) to speed up convergence. Algorithm 1 presents an overview of the VVND.

4.1. Solution Representation. A mixed encoding scheme is designed to represent a solution. In the encoding scheme, two sections are shown in Figure 5.

First section S_1 is an assignment used to label each customer's service options. If the value in the assignment belongs to $\{N + 1 : N + M\}$, then the customer picks up the parcel from the SDF. If the value is 0, then the customer receives the parcel at home or workplace.

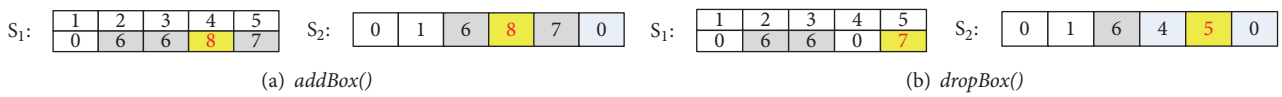

(a) *addBox()* (b) *dropBox()*

Figure 6: Illustration of the *addBox() and dropBox()*.

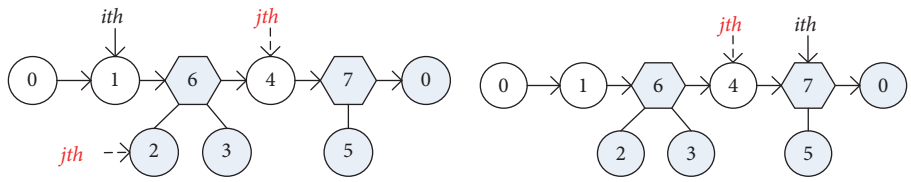

(a) Case (a) (b) Case (b)

Figure 7: Insertion move operator.

```
k=1;iter=0;
S=InitalSolution();
Repeat
    rd = rand();
    if rd < 0.5
        openNum=rand()%S.closeBoxNum;
        S' = addBox(S, openNum);
    else
        closeNum = rand()%S.openBoxNum;
        S' = dropBox(S, closeNum);
    end
    S' = FindBestNeighbor(S');
    if f(S') < f(S)
        S = S';
        k = 1;
    else
        if iter < iterMax
            iter = 0;
            k = k + 1;
        end
    end
    iter = iter + 1;
Until k > kMax
```

Algorithm 1: VVND.

Second section S_2 is a route consisting of customers and SDFs. In the routing, courier starts and ends at the depot and delivers parcels to customers or SDFs one by one.

4.2. addBox() and dropBox() Procedures. The steps of the *addBox()* are as follows:

(1) Randomly select *openNum* closed SDFs (if there are any) and open them.

(2) Reallocate the customers within the service radius of the SDFs.

(3) Randomly insert the SDFs into the route.

The steps of *dropBox()* are as follows:

(1) Randomly select *closeNum* opened SDFs (if there are any).

(2) Delete the SDFs from the delivery route.

(3) Randomly insert the customers of the SDFs into the delivery route.

Figure 6 illustrates the *addBox()* and *dropBox()*.

4.3. Neighborhood Structures. **Insertion move (N_1).** The insertion move is carried out by selecting everyach two nodes, that is, *ith* node and *jth* nodes of the solution, and reinserting the *ith* node into the position immediately before (or in) the *jth* node of the solution. The insertion move has two effects as follows.

Case (a): If the selected node is a customer (in the route or SDF), then it can be reinserted to the route or the SDF.

Case (b): If the selected node is a SDF, then it can be only reinserted to route.

Figure 7 illustrates the insertion move.

Improved 2-Opt move (N_2). A subsequence is obtained by selecting each two nodes, that is, the *ith* and *jth* nodes of the solution. Reversing the order of the subsequence can obtain a new solution. Note that the selected node *ith* or *jth* cannot be a customer in SDF. Figure 8 illustrates the 2-opt move.

In the network with time windows, partial arcs are disconnected due to the time window constraints, which can be used to calculate each node location range (LR) in the route. By using LR, partial useless exchange can be reduced.

Figure 9 exhibits that the location range of customer i is $[loc(i) + 1, N]$, the useless exchange in $[0, loc(i)]$ can be deleted, and the $loc(i)$ can be calculated by Formula (14).

$$loc(i) = \begin{cases} loc(i) + 1 & et_i + t_{ij} > lt_j \\ loc(i) & otherwise \end{cases} \quad j = 1, 2, \ldots, N \quad (14)$$

5. Computational Experiments

The proposed algorithm is compiled with C++ and runs on PC with an Intel i5-7500 3.40 GHz CPU, 8.00GB RAM.

5.1. Test with Time Windows Change. The test dataset consists of 100 customers (an instance n100w60.004 proposed by

Table 2: Time windows change.

Customer no.	Status	Time window		Customer no.	Status	Time window	
		et_i	lt_i			et_i	lt_i
6	Old TW	627	664	43	Old TW	382	413
	New TW	50	100		New TW	30	80
10	Old TW	460	499	47	Old TW	34	122
	New TW	100	150		New TW	500	540
13	Old TW	21	67	53	Old TW	0	68
	New TW	400	440		New TW	600	668
27	Old TW	145	233	62	Old TW	510	574
	New TW	350	400		New TW	110	170
34	Old TW	725	795	70	Old TW	37	128
	New TW	200	260		New TW	700	758

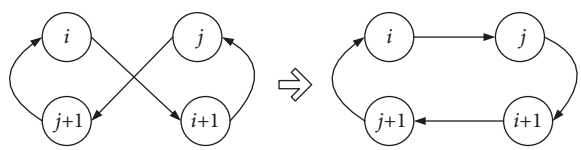

Figure 8: 2-opt move operator.

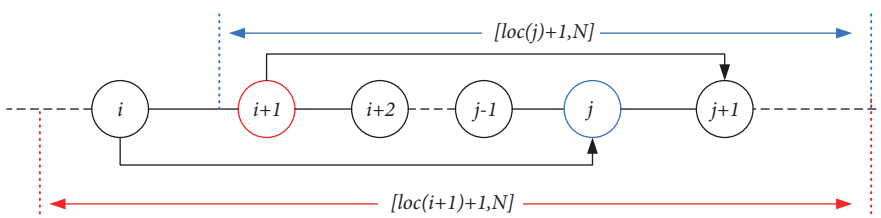

Figure 9: Improved 2-Opt algorithm.

Dumas et al. [24]) and nine SDFs. The coordinates of the SDFs are evenly distributed in the area of [50,50]: 102(10,10), 103(10,30), 104(10,45), 105(25,10), 106(25,30), 107(25,45), 108(40,10), 109(40,30), 110(40,45). The known optimal solution is {1, 94, 58, 42, 98, 82, 9, 59, 39, 75, 53, 35, 13, 84, 41, 5, 50, 70, 80, 25, 47, 55, 66, 95, 11, 23, 2, 100, 30, 67, 31, 26, 96, 21, 81, 79, 27, 38, 17, 61, 92, 86, 57, 15, 36, 19, 85, 77, 60, 20, 69, 44, 48, 64, 40, 52, 72, 73, 7, 32, 87, 29, 90, 22, 51, 65, 56, 49, 46, 91, 54, 71, 74, 78, 43, 68, 12, 18, 33, 14, 37, 88, 8, 10, 93, 16, 99, 3, 83, 97, 62, 89, 28, 45, 76, 24, 6, 4, 101, 34, 63}, and the route cost is 764. When the courier delivers to the customer 98#, the courier receives the time window change information (Table 2).

The parameters are the same as the above tests: $R = 20$, $w_1 = w_2 = w_3 = 1$, $\alpha = 1$, $\beta = 1$, $u_p = 5$. The optimal solution obtained by the proposed algorithm is shown in Tables 3 and 4. Table 3 presents the customer assignments of the SDFs, and Table 4 presents the delivery route.

This study reports the comparisons of the reschedule route in the CP mode (RRCP) with the original delivery route (ODR) and the reschedule route in the HD mode (RRHD), where Difference = RRCP − RRHD and GAP = (RRHD - RRCP) / RRHD ∗100 (see Table 5).

Table 3: Optimal solution of customer assignment.

SDF no.	Customer no.	SDF no.	Customer no.
102	13,62,76,89	107	/
103	28,43,45,53,59	108	4
104	12,18,24,33,68	109	26,34,37
105	63,97	110	/
106	14		

Compared with the RRHD, the RRCP increases the pickup cost and SDF opening cost by providing customer pickup services, but the total cost is reduced by 40.08%. The delay time is reduced from 521 to 17 or 96.74%; route cost is reduced from 703 to 442 or 37.13%. As carbon emission is closely related to delivery route distance, the proposed model can help effectively reduce carbon emission.

5.2. Sensitive Analyses. To gain additional insights, a sensitive analysis is conducted to show how the acceptable distance R influences cost. When R ranges from 0 to 50, the results are reported in Table 6 and Figure 10.

Table 4: Optimal solution of delivery route.

1-94-58-42-98-82-103-9-39-75-35-50-84-41-5-102-80-25-55-66-11-95-23-6-96-31-67-109-30-100-2-21-81-79-108-10-17-61-38-92-86-57-15-36-19-85-77-60-20-104-69-44-48-64-40-52-72-73-7-32-87-29-90-22-65-51-56-49-46-91-54-71-74-10678-105-27-93-3-99-16-8-88-83-47-101-70

Table 5: Comparison of the three schemes.

Item	ODR	RRHD	RRCP	Difference	GAP(%)
Delay time	53000	521	17	−504	96.74%
Pickup cost	0	0	169	+169	–
Opening cost	0	0	105	+105	–
Route cost	764	703	442	−261	37.13%
Total cost	53764	1224	733	−491	40.08%
CPU Time (S)	0	21	22		

Table 6: Results of sensitive analysis of R on cost.

Item	R							
	0	5	10	15	20	30	40	50
Delay time	521	197	97	17	17	17	17	17
Pickup cost	0	41	97	169	169	169	169	169
Opening cost	0	60	80	105	105	105	105	105
Route cost	703	647	552	442	442	442	442	442
Total cost	1224	944	826	733	733	733	733	733

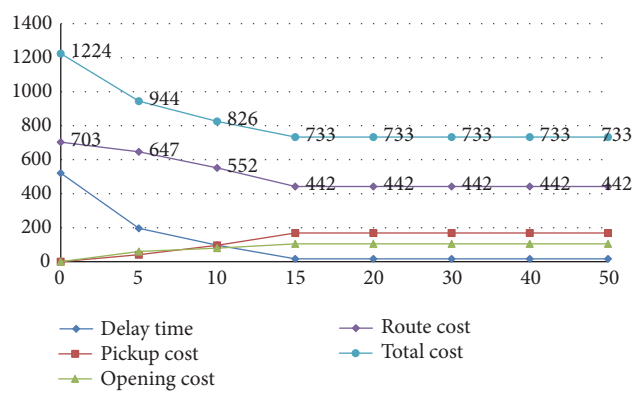

Figure 10: Sensitive analysis of R on cost.

From the sensitive analysis, we can see that when $R = 0$, the proposed method is optimal without SDF. When $0 < R \leq 50$, the delay time and route cost are first to fall continuously and then keep invariability. The pickup cost is increased with the increase of R. From a cost optimization perspective, $R = 15$ is the best SDF service radius in this instance.

5.3. Computational Results Comparison. For the evaluation of the performance of the proposed algorithm, tests based on the benchmark instance proposed by Dumas et al. [24] are used. The networks consist of one depot and 20, 40, 60, 100, and 150 customers. The width of time window is 60. The locations of SDFs are {(32, 5), (14,28), (48,49), (8,49), (48,25), (41,8), (22,46), (40,48), (33,2), (43,47), (34,38), (38,20), (33,9), (36,2), (14,3), (5,42), (35,16), (48,2), (22,20), (39,40), (10,25), (23,33), (36,38), and (14,34)}, which are generated randomly in an area of $[0,50] \times [0,50]$. The parameters are listed as follows: $R = 20$, $w_1 = w_2 = w_3 = 1, \alpha = 1, \beta = 1, u_p = 5$. The parameters of VVND are kMax = M and iterMax = M/2.

5.3.1. Comparison with Other Algorithms. Table 7 presents comparisons of the proposed VVND and Simulated Annealing (SA). N represents the number of customer nodes; M represents the number of SDFs. The values under the "GAP" columns are calculated by the formula $[\mathrm{Obj}_{(SA)}\text{-}\mathrm{Obj}_{(VVND)}]/\mathrm{Obj}_{(SA)} * 100$. The solutions obtained by SA [25] are shown in Columns 4-5. Columns 6-7 show the solutions obtained from the proposed VVND. Time is the CPU time in seconds on a PC (i5-7500@3.40 GHz, 8.00GB RAM). The parameters of SA are set as follows: T=N, alpha=0.98, and I_{iter}=M. All the best solutions of SA and VVND are obtained with 5 runs of the algorithms.

Table 7 indicates that the proposed algorithm outperforms SA in terms of solution quality. The VVND produces the best solutions to all 25 instances, while SA produces only 8 best solutions. The average gap between the two algorithms is 1.87%.

5.3.2. Comparison with HD. Table 8 exhibits the results. N represents the number of customers; M represents the number of SDFs; GAP = (Total cost1-Total cost2) / Total cost1∗100. The values of column "Total cost1" are the best known solution proposed by Dumas et al.[24]. The values of column "Total cost2" are the best solution obtained by 5 runs.

Table 8 shows the following. (1) Compared with HD, the proposed method has a significant improvement, and the total cost is reduced by 3.44% to 34.82% with the increased

Table 7: Comparison between SA and the proposed method.

No.	N	M	SA		VVND		GAP(%)
			Obj	Time	Obj	Time	
1	20	1	**289**	0.003	**289**	0.002	0.00
2	20	2	**261**	0.008	**261**	0.005	0.00
3	20	3	**251**	0.015	**251**	0.017	0.00
4	20	4	**238**	0.027	**238**	0.029	0.00
5	20	5	**228**	0.036	**228**	0.053	0.00
6	40	1	**477**	0.046	**477**	0.013	0.00
7	40	3	430	0.180	**421**	0.089	2.09
8	40	5	385	0.358	**368**	0.293	4.42
9	40	7	326	0.651	**326**	0.772	0.00
10	40	9	326	0.957	**322**	1.107	1.23
11	60	1	**580**	0.180	**580**	0.042	0.00
12	60	4	532	0.920	**503**	0.523	5.45
13	60	7	455	2.155	**449**	1.301	1.32
14	60	10	440	3.580	**437**	2.726	0.68
15	60	13	440	5.628	**437**	4.802	0.68
16	100	1	629	1.111	**627**	0.178	0.32
17	100	5	562	7.030	**551**	2.647	1.96
18	100	10	561	15.604	**534**	10.473	4.81
19	100	15	530	28.451	**528**	26.282	0.38
20	100	20	530	42.368	**522**	42.486	1.51
21	150	1	810	4.753	**801**	0.590	1.11
22	150	6	800	28.851	**759**	17.938	5.13
23	150	12	735	67.610	**705**	47.126	4.08
24	150	18	732	115.203	**690**	76.767	5.74
25	150	24	720	169.527	**678**	146.271	5.83
AVG			490.68	19.81	479.28	15.30	1.87

SDFs. (2) When the service radius of the SDF is fixed, with the increased SDFs, pickup and the opening costs increase, but the total cost decreases.

6. Conclusions

This study proposed a disruption recovery problem with time window changes in the last mile delivery of online shopping. One characteristic of the problem is that the delivery route could be rescheduled by using SDFs when time window changing disruptions occurred during the delivery process. The VVND algorithm was presented, which included a 2-opt algorithm improved by LR to speed up its convergence, to solve this problem. The proposed method and algorithm were tested on a set of instances. The results corroborated that the proposed method could quickly recover the delivery and reduce the total delivery cost when time window changing disruptions occurred in the last mile delivery. Meanwhile, the proposed algorithm had an evident competitiveness compared with other heuristics, and the total delivery cost could be reduced by approximately 3% to 34% with the increasing number of SDFs compared with the solution of the HD mode.

Data Availability

The data used to support the findings of this study are available from the corresponding author upon request.

Conflicts of Interest

The authors declare that they have no conflicts of interest.

Acknowledgments

This work was supported by the National Science and Technology Support Program of China (Grant Nos. 71331002, 71502047, 71601061, and 71771077); the Ministry of Chinese Education, Humanities and Social Sciences project (Grant No. 17YJA630037); the National Key R&D Program of China (No. 2016YFC0803203); the Fundamental Research Funds for the Central Universities project (Grant No. JS2017HGXJ0044); the "Double-First Class" Construct Project (Grant No. 45000-411104/005); and the Natural Science Foundation of Anhui Province in China (Grant No. 1808085QG229).

Table 8: Comparison between HD and the proposed method.

No.	N	M	HD Total cost1	Proposed method Total cost2	Route cost	Delay time	Pickup cost	Opening cost	GAP (%)
1	20	1	335	289	263	0	16	10	13.73
2	20	2	335	261	211	0	35	15	22.09
3	20	3	335	251	177	0	54	20	25.07
4	20	4	335	238	216	0	12	10	28.96
5	20	5	335	228	195	0	23	10	31.94
6	40	1	494	477	477	0	0	0	3.44
7	40	3	494	421	352	0	49	20	14.78
8	40	5	494	368	277	0	66	25	25.51
9	40	7	494	326	253	0	48	25	34.01
10	40	9	494	322	253	0	44	25	34.82
11	60	1	609	580	561	0	14	5	4.76
12	60	4	609	503	386	0	72	45	17.41
13	60	7	609	449	331	0	63	55	26.27
14	60	10	609	437	334	0	53	50	28.24
15	60	13	609	437	334	0	53	50	28.24
16	100	1	655	627	587	0	25	15	4.27
17	100	5	655	551	489	0	37	25	15.88
18	100	10	655	534	454	0	45	35	18.47
19	100	15	655	528	447	0	46	35	19.39
20	100	20	655	522	447	0	40	35	20.31
21	150	1	859	801	747	0	39	15	6.75
22	150	6	859	759	577	0	112	70	11.64
23	150	12	859	705	541	0	94	70	17.93
24	150	18	859	690	597	0	53	40	19.67
25	150	24	859	678	504	0	89	85	21.07
AVG			590	479					19.79

References

[1] A. M. Florio, D. Feillet, and R. F. Hartl, "The delivery problem: Optimizing hit rates in e-commerce deliveries," *Transportation Research Part B: Methodological*, vol. 117, pp. 455–472, 2018.

[2] X. Wang, J. Ruan, and Y. Shi, "A recovery model for combinational disruptions in logistics delivery: Considering the real-world participators," *International Journal of Production Economics*, vol. 140, no. 1, pp. 508–520, 2012.

[3] J.-Q. Li, P. B. Mirchandani, and D. Borenstein, "Real-time vehicle rerouting problems with time windows," *European Journal of Operational Research*, vol. 194, no. 3, pp. 711–727, 2009.

[4] Q. Mu, Z. Fu, J. Lysgaard, and R. Eglese, "Disruption management of the vehicle routing problem with vehicle breakdown," *Journal of the Operational Research Society*, vol. 62, no. 4, pp. 742–749, 2011.

[5] M. Punakivi and K. Tanskanen, "Increasing the cost efficiency of e-fulfilment using shared reception boxes," *International Journal of Retail & Distribution Management*, vol. 30, no. 10, pp. 498–507, 2002.

[6] V. Kämäräinen, J. Saranen, and J. Holmsträm, "The reception box impact on home delivery efficiency in the e-grocery business," *International Journal of Physical Distribution and Logistics Management*, vol. 31, no. 6, pp. 414–426, 2001.

[7] J. Edwards, A. McKinnon, T. Cherrett, F. McLeod, and L. Song, "Carbon dioxide benefits of using collection-delivery points for failed home deliveries in the United Kingdom," *Transportation Research Record*, no. 2191, pp. 136–143, 2010.

[8] E. Morganti, S. Seidel, C. Blanquart, L. Dablanc, and B. Lenz, "The Impact of E-commerce on Final Deliveries: Alternative Parcel Delivery Services in France and Germany," *Transportation Research Procedia*, vol. 4, pp. 178–190, 2014.

[9] J. Lemke, S. Iwan, and J. Korczak, "Usability of the Parcel Lockers from the Customer Perspective - The Research in Polish Cities," *Transportation Research Procedia*, vol. 16, pp. 272–287, 2016.

[10] K. F. Yuen, X. Wang, L. T. W. Ng, and Y. D. Wong, "An investigation of customers' intention to use self-collection services for last-mile delivery," *Transport Policy*, vol. 66, pp. 1–8, 2018.

[11] Y. Deutsch and B. Golany, "A parcel locker network as a solution to the logistics last mile problem," *International Journal of Production Research*, vol. 56, no. 1-2, pp. 251–261, 2018.

[12] L. Zhou, X. Wang, L. Ni, and Y. Lin, "Location-routing problem with simultaneous home delivery and customer's pickup for city distribution of online shopping purchases," *Sustainability*, vol. 8, pp. 8–28, 2016.

[13] L. Zhou, R. Baldacci, D. Vigo, and X. Wang, "A multi-depot two-echelon vehicle routing problem with delivery options arising in the last mile distribution," *European Journal of Operational Research*, vol. 265, no. 2, pp. 765–778, 2018.

[14] S. Bisaillon, J.-F. Cordeau, G. Laporte, and F. Pasin, "A large neighbourhood search heuristic for the aircraft and passenger recovery problem," *4OR—A Quarterly Journal of Operations Research*, vol. 9, no. 2, pp. 139–157, 2011.

[15] K. Sinclair, J.-F. Cordeau, and G. Laporte, "Improvements to a large neighborhood search heuristic for an integrated aircraft and passenger recovery problem," *European Journal of Operational Research*, vol. 233, no. 1, pp. 234–245, 2014.

[16] A. Sternberg, D. Carvalho, L. Murta, J. Soares, and E. Ogasawara, "An analysis of Brazilian flight delays based on frequent patterns," *Transportation Research Part E: Logistics and Transportation Review*, vol. 95, pp. 282–298, 2016.

[17] B. D. Brouer, J. Dirksen, D. Pisinger, C. E. M. Plum, and B. Vaaben, "The Vessel Schedule Recovery Problem (VSRP) - A MIP model for handling disruptions in liner shipping," *European Journal of Operational Research*, vol. 224, no. 2, pp. 362–374, 2013.

[18] F. Cheraghchi, I. Abualhaol, R. Falcon, R. Abielmona, B. Raahemi, and E. Petriu, "Modeling the speed-based vessel schedule recovery problem using evolutionary multiobjective optimization," *Information Sciences*, vol. 448/449, pp. 53–74, 2018.

[19] V. Zeimpekis, G. M. Giaglis, and I. Minis, "A dynamic real-time fleet management system for incident handling in city logistics," in *Proceedings of the 2005 IEEE 61st Vehicular Technology Conference -VTC 2005 - Spring Stockholm: Paving the Path for a Wireless Future*, pp. 2900–2904, Sweden, June 2005.

[20] J.-Y. Potvin, Y. Xu, and I. Benyahia, "Vehicle routing and scheduling with dynamic travel times," *Computers & Operations Research*, vol. 33, no. 4, pp. 1129–1137, 2006.

[21] L. Zhang, J. de Gier, and T. M. Garoni, "Traffic disruption and recovery in road networks," *Physica A: Statistical Mechanics and its Applications*, vol. 401, pp. 82–102, 2014.

[22] V. C. Hemmelmayr, K. F. Doerner, and R. F. Hartl, "A variable neighborhood search heuristic for periodic routing problems," *European Journal of Operational Research*, vol. 195, no. 3, pp. 791–802, 2009.

[23] B. Jarboui, H. Derbel, S. Hanafi, and N. Mladenovic, "Variable neighborhood search for location routing," *Computers & Operations Research*, vol. 40, no. 1, pp. 47–57, 2013.

[24] Y. Dumas, J. Desrosiers, E. Gelinas, and M. M. Solomon, "An optimal algorithm for the traveling salesman problem with time windows," *Operations Research*, vol. 43, no. 2, pp. 367–371, 1995.

[25] V. F. Yu, S.-W. Lin, W. Lee, and C.-J. Ting, "A simulated annealing heuristic for the capacitated location routing problem," *Computers & Industrial Engineering*, vol. 58, no. 2, pp. 288–299, 2010.

Advances in Operations Research
Advances in Decision Sciences
Journal of Applied Mathematics
The Scientific World Journal
Journal of Probability and Statistics
International Journal of Mathematics and Mathematical Sciences
Hindawi
Submit your manuscripts at
www.hindawi.com
Journal of Optimization
International Journal of Engineering Mathematics
International Journal of Analysis
Journal of Complex Analysis
Advances in Numerical Analysis
Mathematical Problems in Engineering
International Journal of Differential Equations
Discrete Dynamics in Nature and Society
International Journal of Stochastic Analysis
Journal of Mathematics
Journal of Function Spaces
Abstract and Applied Analysis
Advances in Mathematical Physics